EC Centrifugal Fans

Backward Curved, Φ190

EC后向离心风机

Impeller: Plastic PP
Motor: EC brushless external rotor motor
Insulation: Class B
Approvals: CE;UL E306337
Operating Temperature: -20~+60℃
Technical Features: Control input 0-10VDC/PWM, tach output.Locked rotor protection,recerse polarity. Current limited,soft start

叶轮材质：塑胶PP
电机类型：EC无刷外转子电机
绝缘等级：Class B
产品符合的认证：CE;UL E306337
工作温度：-20～+60℃
技术特性：调速输入0-10VDC/PWM，调速信号输出，堵转，极性、限流保护，软启动

技术参数 Specifications

Listed Model 产品型号	Rated Voltage 额定电压	Operating Voltage 工作电压	Rated Current 额定电流	Rated Pow er 额定功率	Rated Speed 额定转速	Air Flow 风 量		Air Pressure 风 压		Noise Level 噪 音	Net Weight 重 量
Part NO.	**VAC**	**VAC**	**A**	**W**	**RPM**	**CFM**	**m^3/h**	**mmH_2O**	**inH_2O**	**dBA**	**Kg**
PI1E19064HB2M	115	92~132	1.60	97.0	3,500	436.1	740.6	58.7	2.3	71.5	1.30
PI2E19064HB2M	230	184~265	0.80	97.0	3,500	436.1	740.6	58.7	2.3	71.5	1.30

外形 Outline

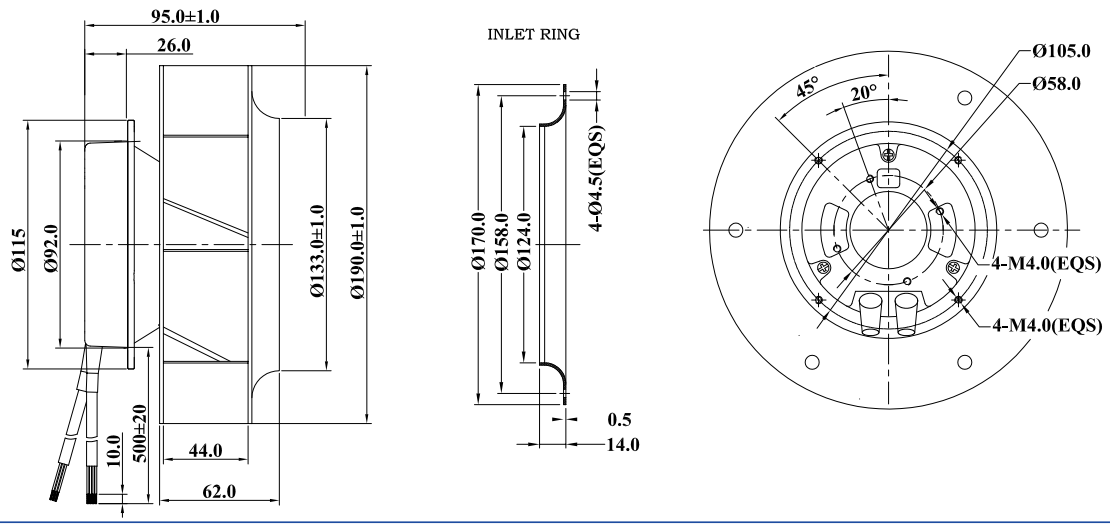
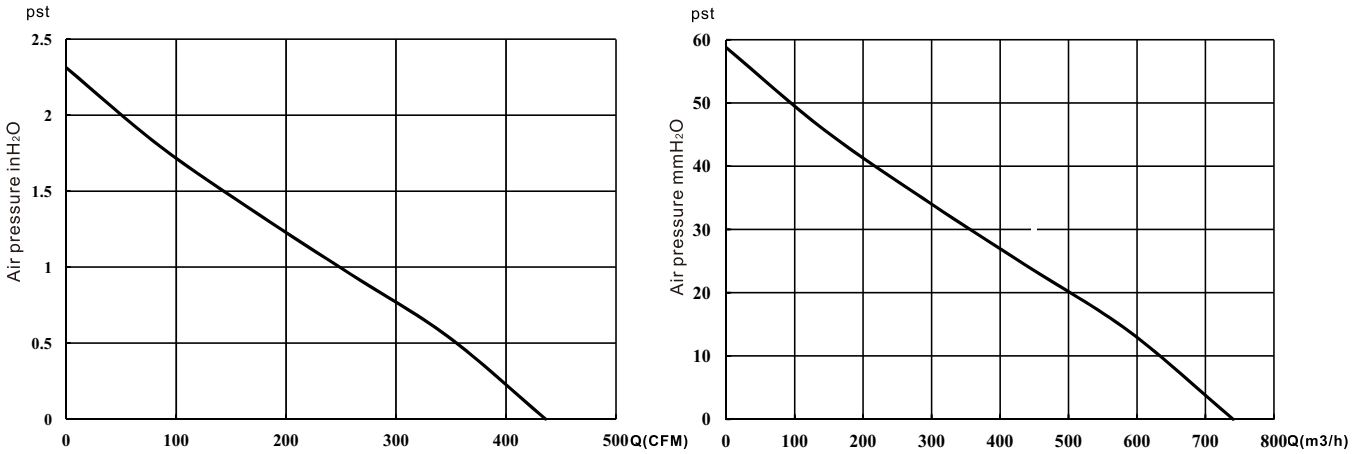
曲线 Curves